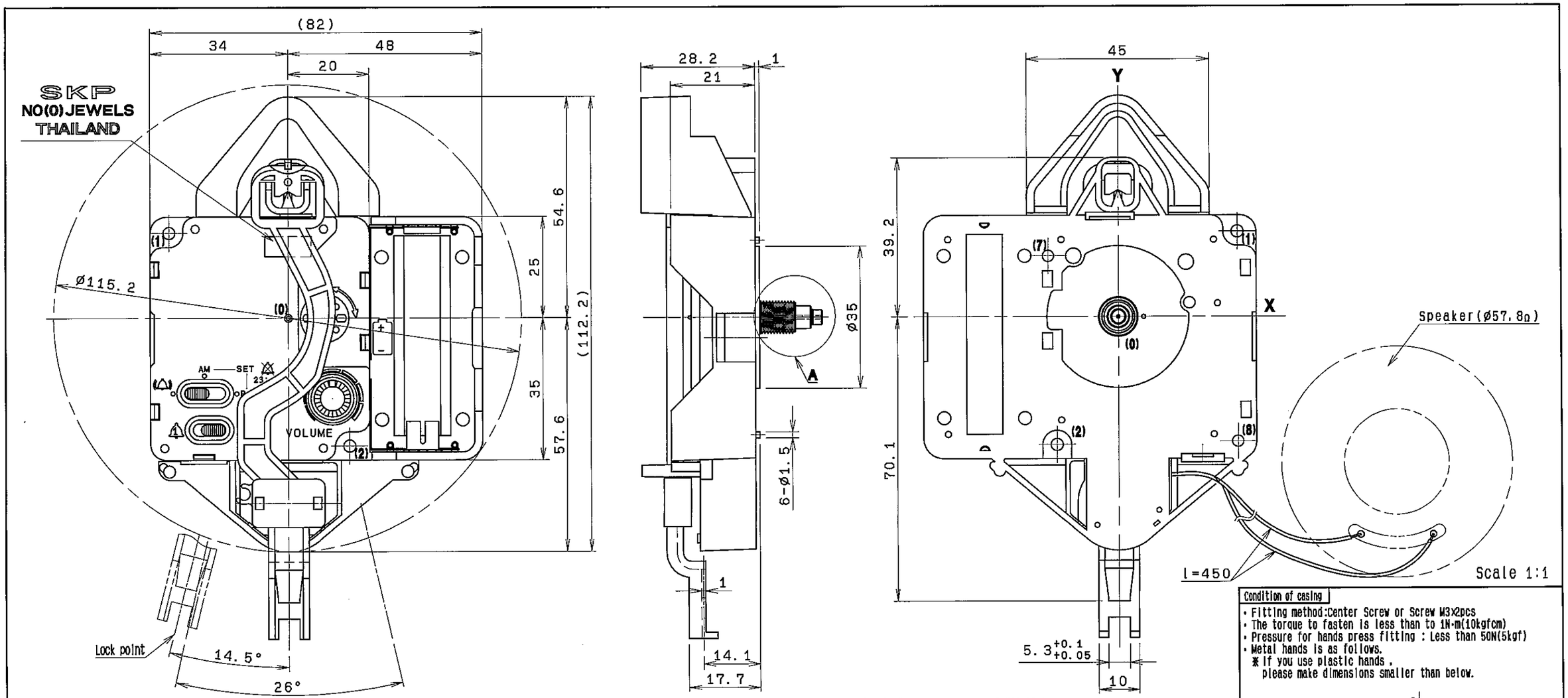

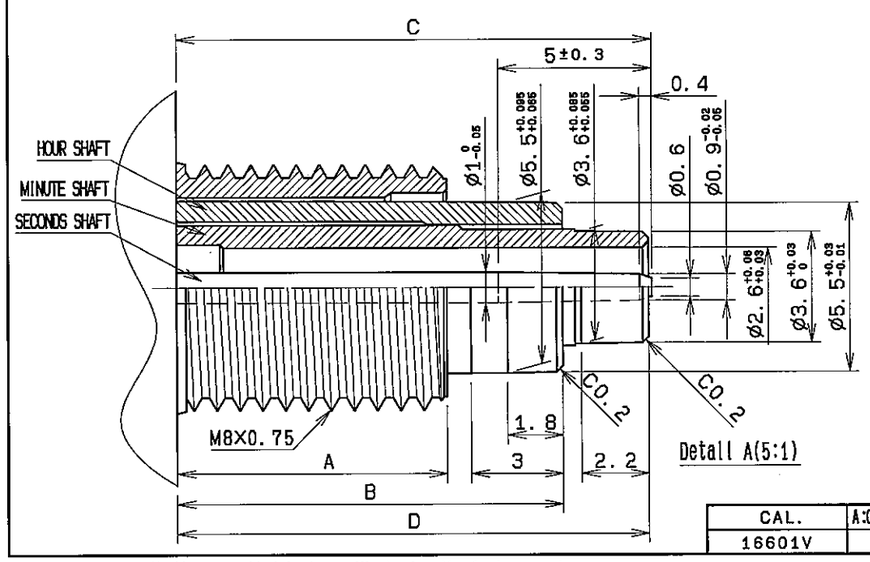

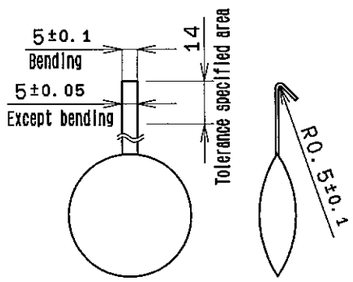

Hanging form(1:2)

Circuit form	:C-MOS IC 1pcs.
Original governor	:Crystal oscillator 4.194304 MHz
Indication	:3 hands step motion
Starting method	:Automatic start
Time adjustment function	:Reverse side turns
Melody	:Westminster、Whittington
Accuracy	:Monthly rate ±20 seconds
Usage temperature range	:(-10~+50)℃
Usage voltage range	:(1.3~1.7)V
Output torque	:Minute hand More than 2.7x10⁻⁴Nm(27gfcm)/1.3V Second hand More than 5x10⁻⁵Nm(0.5gfcm)/1.3V
Power source	:Alkaline(LR14)x1pcs , 1.5V
Battery life	:About 1 year
Accuracy of striking	:With in ±30sec
Striking sound pressure	:According to speaker specifications
Striking current	:According to speaker specifications
Length of pendulum lod	:(120~350)mm
Weight of pendulum	:(40~60)g
Swing angle	:More than 6°/1.5V(23±3)℃
Operating posture	:Front and back Within ±2°/1.5V(23±3)℃ Left and right Within ±3°/1.5V(23±3)℃
Average current	:Less than 130μA/1.5V(23±3)℃
Cycle	:According to the length of pendulum lod

Made in SEIKO Factory (Thailand)

CAL.	A:Center Screw	B:Hour Hand	C:Seconds Hand	D:Minute Hand
16601V	8.8	12.6	15.5	15.4

No.	NAME	X	Y	
8	Guide hole	29.4	-30.7	ø2.75 +0.05 +0.01 DEPTH<3
7	Guide hole	-17.2	15	ø2.75 +0.05 +0.01 DEPTH<3
2	Fixing hole	-15.1	-31.5	ø3
1	Fixing hole	29.3	21	ø3
0	Hand center	0	0	

Condition of casing

- Fitting method:Center Screw or Screw M3x2pcs
- The torque to fasten is less than to 1N·m(10kgfcm)
- Pressure for hands press fitting : Less than 50N(5kgf)
- Metal hands is as follows.
  ※ If you use plastic hands , please make dimensions smaller than below.

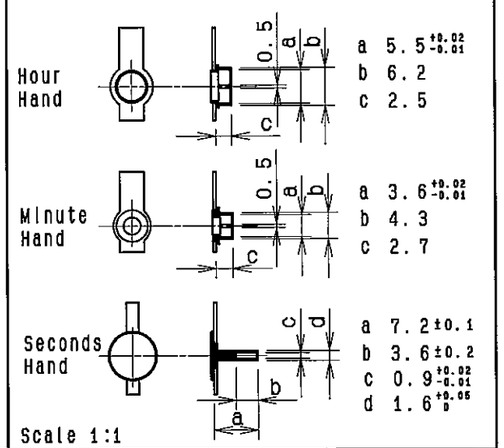

Hands \ Condition	Unbalance N·m (gf·cm)	Weight (g)	Length from center (mm)
Seconds hand	Less than 1.5x10⁻⁴(0.15)	Less than 2	Less than 130
Minute Hand	Less than 3x10⁻⁴(3)	Less than 5	Less than 160
Hour hand	Less than 1x10⁻⁴(3)	Less than 5	Less than 160

3RD ANGLE PROJECTION
UNIT:mm

The above product specifications are subject to change without prior notice for improvement.